U Bolt Standard

B 003

for Steel Pipe

Nominal Pipe Size					
Imperial	Metric	A	A1	C	Thread Size
1/2	15	30	48	29	m6
3/4	20	30	53	35	m6
1	25	30	60	42	m6
1 1/4	32	40	70	52	m10
1 1/2	40	40	75	60	m10
2	50	40	85	72	m10
2 1/2	65	40	100	88	m10
3	80	40	115	103	m12
4	100	40	140	130	m12
5	125	40	165	153	m12
6	150	50	195	182	m12
7	175	50	225	209	m12
8	200	50	244	240	m16
9	225	50	275	264	m16
10	250	50	315	293	m16
12	300	50	360	342	m16
14	350	85	395	378	m16
16	400	85	485	428	m16
18	450	85	540	478	m16
20	500	85	595	528	m16

Standard Finish Zinc Plated

Other Thread Sizes Available

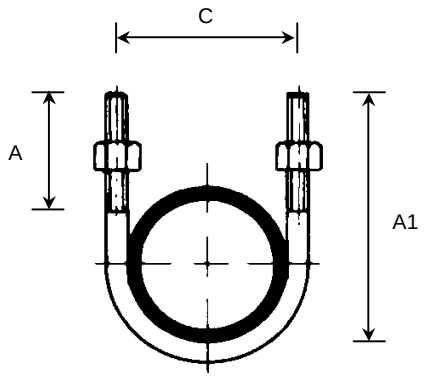

U Bolt Extended

B 003

for Steel Pipe

Nominal Pipe Size					
Imperial	Metric	B	B1	C	Thread Size
1/2	15	75	97	29	m6
3/4	20	75	103	35	m6
1	25	75	111	42	m6
1 1/4	32	85	122	52	m10
1 1/2	40	85	127	60	m10
2	50	85	140	72	m10
2 1/2	65	85	152	88	m10
3	80	90	168	103	m12
4	100	90	193	130	m12
5	125	90	213	153	m12
6	150	90	240	182	m12
7	175	95	265	209	m12
8	200	95	298	240	m16
9	225	95	315	264	m16
10	250	95	349	293	m16
12	300	95	387	342	m16

Standard Finish Zinc Plated

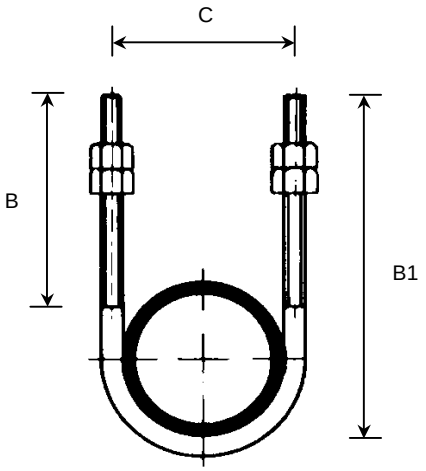

Supports To Suit Insulation

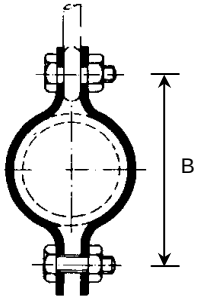

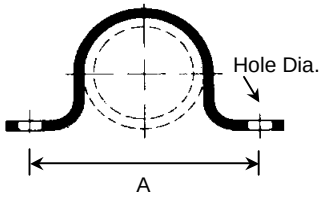

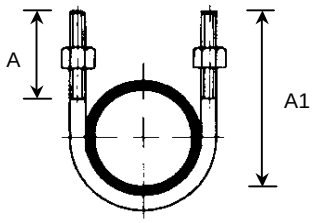

Insulation	B 001 2 Bolt Clip			B 002 Saddle Anchor			B 003 U Bolt Standard		
o/d	B	Material Size	Bolt Size	A	Hole Dia.	Material Size	A (Min.)	A1	Thread Size
45	96	30 x 3	m10 x 30	100	12	30 x 3	30	100	m8
54	104	30 x 3	m10 x 30	108	12	30 x 3	50	109	m8
60	110	30 x 3	m10 x 30	114	12	30 x 3	50	115	m8
65	116	30 x 3	m10 x 30	120	12	30 x 3	50	120	m8
70	120	30 x 3	m10 x 30	126	12	30 x 3	50	125	m8
76	126	30 x 3	m10 x 30	130	12	30 x 3	60	141	m10
83	133	30 x 3	m10 x 30	137	12	30 x 3	60	148	m10
89	139	30 x 3	m10 x 30	143	12	30 x 3	60	154	m10
95	145	30 x 3	m10 x 30	149	12	30 x 3	60	160	m10
102	152	30 x 3	m10 x 30	156	12	30 x 3	60	167	m10
108	158	30 x 3	m10 x 30	162	12	30 x 3	60	173	m10
114	174	40 x 3	m12 x 40	178	14	40 x 3	60	179	m10
121	181	40 x 3	m12 x 40	185	14	40 x 3	60	186	m10
127	187	40 x 3	m12 x 40	191	14	40 x 3	60	192	m10
133	193	40 x 3	m12 x 40	197	14	40 x 3	60	198	m10
139	199	40 x 3	m12 x 40	203	14	40 x 3	60	204	m10
146	206	40 x 3	m12 x 40	210	14	40 x 3	60	211	m10
152	212	40 x 3	m12 x 40	216	14	40 x 3	60	217	m10
159	219	40 x 3	m12 x 40	223	14	40 x 3	65	224	m12
168	228	40 x 3	m12 x 40	232	14	40 x 3	65	233	m12
173	233	40 x 3	m12 x 40	237	14	40 x 3	65	238	m12
178	238	40 x 3	m12 x 40	242	14	40 x 3	65	243	m12
186	256	40 x 5	m12 x 40	256	14	40 x 5	65	251	m12
193	263	40 x 5	m12 x 40	263	14	40 x 5	65	258	m12
199	269	40 x 5	m12 x 40	269	14	40 x 5	65	264	m12
208	278	40 x 5	m12 x 40	278	14	40 x 5	65	273	m12
216	286	40 x 5	m12 x 40	286	14	40 x 5	65	281	m12
225	295	40 x 5	m12 x 40	295	14	40 x 5	65	290	m12
232	302	40 x 5	m12 x 40	302	14	40 x 5	65	297	m12
244	314	40 x 5	m12 x 40	314	14	40 x 5	65	309	m12
252	322	40 x 5	m12 x 40	322	14	40 x 5	65	317	m12
259	328	40 x 5	m12 x 40	329	14	40 x 5	65	324	m12
268	337	40 x 5	m12 x 40	338	14	40 x 5	65	333	m12
273	350	50 x 6	m16 x 50	368	19	50 x 6	50	315	m16
283	360	50 x 6	m16 x 50	378	19	50 x 6	50	325	m16
290	370	50 x 6	m16 x 50	385	19	50 x 6	50	332	m16
299	380	50 x 6	m16 x 50	394	19	50 x 6	50	341	m16
308	390	50 x 6	m16 x 50	403	19	50 x 6	50	350	m16
323	400	50 x 6	m16 x 50	418	19	50 x 6	50	360	m16
Larger Sizes On Request									

B 001 & B 002 Standard Finish Red Oxide

B 003 Standard Finish Zinc Plated

Other Types Of Supports Available

U Bolts Standard

B 021

for Cast Iron Pipe

Pipe N.B.		Cast Iron Drain BS437		Cast Iron Soil (LCC) BS416	
Metric	Thread Size	Pipe Dia.	A	Pipe Dia.	A
50	m8	65	40	63	40
65	m10			76	40
75	m10	92	40	89	40
90	m10			101	40
100	m10	119	40	114	40
125	m10			140	40
150	m12	173	50	165	40
225	m12	256	50		

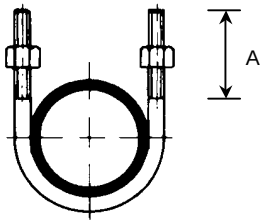

Standard Finish Zinc Plated

U Bolts Extended

B 021

for Cast Iron Pipe

Pipe N.B.		Cast Iron Drain BS437		Cast Iron Soil (LCC) BS416	
Metric	Thread Size	Pipe Dia.	B	Pipe Dia.	B
50	m8	65	85	63	85
65	m10			76	85
75	m10	92	85	89	90
90	m10			101	90
100	m10	119	85	114	90
125	m10			140	90
150	m12	173	90	165	90
225	m12	256	90		

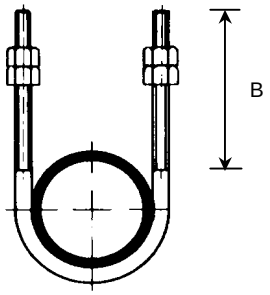

Standard Finish Zinc Plated

Bossed Split Band Clip Single & Double

B 022

for Cast Iron Pipe

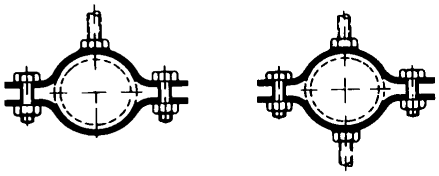

Details On Request

Clevis Hanger

B 023

for Cast Iron Pipe

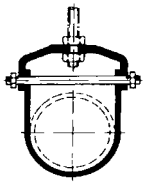

Details On Request

Holder Bat

B 024

for Cast Iron Pipe

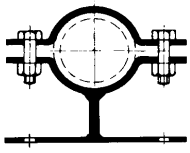

Details On Request

Saddle Guide

B 026

for Copper Pipe

Nominal Pipe Size				
Imperial	Metric	G	Hole Dia.	Material
1/2	15	59	8	25 x 3
3/4	22	66	8	25 x 3
1	28	77	8	25 x 3
1 1/4	35	80	8	25 x 3
1 1/2	42	100	12	30 x 3
2	54	114	12	30 x 3
2 1/2	66	126	12	30 x 3
3	76	136	12	30 x 3
4	108	168	12	30 x 3
5	133	203	14	40 x 3
6	159	229	14	40 x 3

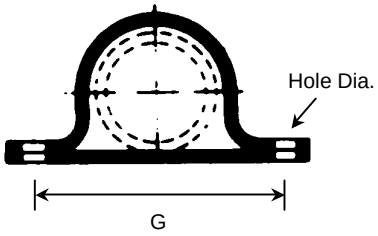

Standard Finish Nylon Coated

Polypropylene strip is used to isolate copper pipe from any supporting steel structure. Please specify if required. All 40mm Wide.

U Bolt Standard

B 027

for Copper Pipe

Nominal Pipe Size				
Imperial	Metric	A	C	Thread Size
1/2	15	30	22	m6
3/4	22	30	29	m6
1	28	30	35	m6
1 1/4	35	30	42	m6
1 1/2	42	40	52	m8
2	54	40	64	m8
2 1/2	66	40	76	m8
3	76	40	88	m10
4	108	40	120	m10
5	133	40	145	m10
6	159	40	173	m12

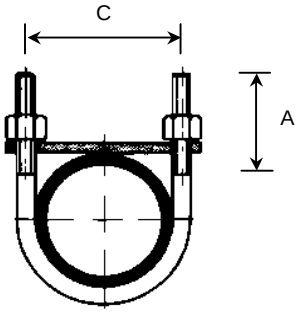

Standard Finish Nylon Coated c/w Zinc Thread

Polypropylene strip is used to isolate copper pipe from any supporting steel structure. Please specify if required. All 40mm Wide.

U Bolt Extended

B 027

for Copper Pipe

Nominal Pipe Size				
Imperial	Metric	B	C	Thread Size
1/2	15	75	22	m6
3/4	22	75	29	m6
1	28	75	35	m6
1 1/4	35	85	42	m6
1 1/2	42	85	52	m8
2	54	85	64	m8
2 1/2	66	85	76	m8
3	76	85	88	m10
4	108	85	120	m10
5	133	85	145	m10
6	159	85	173	m12

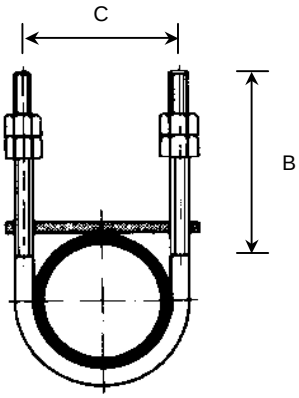

Standard Finish Nylon Coated c/w Zinc Thread

Polypropylene strip is used to isolate copper pipe from any supporting steel structure. Please specify if required. All 40mm Wide.

U Bolt Standard (To Grip The Pipe)

BS 3974: Part 1: 1974

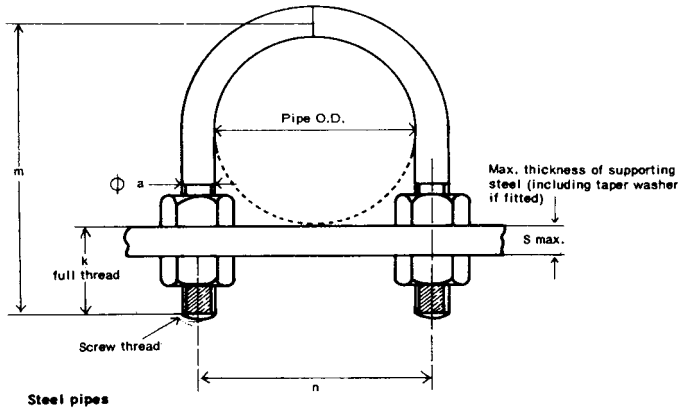

Steel Pipe Size		U Bolt To Grip				
Nominal Bore	Outside Dia.	a Dia.	n	m	k	s Max.
mm	mm	mm	mm	mm	mm	mm
15	21.3	8	30	50	25	7
20	26.9	8	35	60	25	10
25	33.7	8	45	65	25	10
32	42.4	8	55	75	25	10
40	48.3	10	60	90	35	16
50	60.3	10	75	100	35	16
65	76.1	12	90	130	45	19
80	88.9	16	105	150	50	19
100	114.3	16	135	175	50	19
125	139.7	16	160	200	50	19
150	168.3	20	190	235	55	19
175	193.7	20	215	260	55	19
200	219.1	20	245	295	55	19
225	244.5	20	270	310	55	19
250	273.0	20	300	350	60	22
300	323.9	20	350	400	60	22
350	355.6	24	385	440	65	22
400	406.4	24	435	500	65	22
450	457.0	24	485	540	70	22
500	508.0	24	540	600	70	22
550	559.0	24	590	650	70	22
600	610.0	24	640	700	70	22

15 - 150mm Standard Finish Zinc Plated

175 - 600mm Standard Finish Red Oxide

U Bolt Standard (Not To Grip The Pipe)

BS 3974: Part 1: 1974

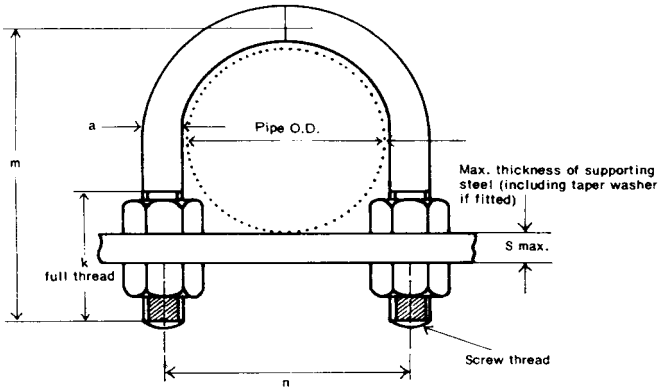

Steel Pipe Size		U Bolt Not To Grip				
Nominal Bore	Outside Dia.	a Dia.	n	m	k	s Max.
mm	mm	mm	mm	mm	mm	mm
15	21.3	8	40	45	25	10
20	26.9	8	45	55	30	10
25	33.7	8	50	60	30	10
32	42.4	8	60	70	30	10
40	48.3	10	65	85	40	16
50	60.3	10	80	100	40	16
65	76.1	12	95	120	50	19
80	88.9	16	110	140	55	19
100	114.3	16	140	165	55	19
125	139.7	16	165	190	55	19
150	168.3	20	195	225	65	19
175	193.7	20	220	250	65	19
200	219.1	20	250	275	65	19
225	244.5	20	275	300	65	19
250	273.0	20	305	335	75	22
300	323.9	20	355	385	75	22
350	355.6	24	390	425	80	22
400	406.4	24	440	475	80	22
450	457.0	24	495	525	80	22
500	508.0	24	545	575	80	22
550	559.0	24	595	625	80	22
600	610.0	24	645	675	80	22

15 - 150mm Standard Finish Zinc Plated

175 - 600mm Standard Finish Red Oxide